佩达 PEIDA Super
CEILING&PARTITION

Address : Unit 1310, 13/F, South Tower Of Xijiao Xieli Business Centre, No. 159,Middle Of Qiaozhong Road,Liwan District, Guangzhou City, Guangdong Province, China
Postal Code : 510250
Tel : 86-20-6236 1215
Fax : 86-20-6236 1237
Mobile : 86-1358 0480 068
Website : www.pandamanufacturer.com
E-mail : sales@gzpanda.cn pandadecoration@gmail.com

公司地址：中国广东省广州市荔湾区桥中中路159号西郊协力商贸中心南塔13层1310单元
邮政编码：510250
电话：86-20-6236 1215
传真：86-20-6236 1237
手机：86-1358 0480 068
网址：www.pandamanufacturer.com
邮箱：sales@gzpanda.cn pandadecoration@gmail.com

# PANDA

佩达 PEIDA Super
CEILING&PARTITION

广州佩达商贸发展有限公司
GUANGZHOU PANDA COMMERCIAL DEVELOPMENT CO.,LTD.

www.pandamanufacturer.com

广州佩达商贸发展有限公司

GUANGZHOU PANDA COMMERCIAL DEVELOPMENT CO.,LTD.

# Ceiling T-GRID System

## About Us



Guangzhou Panda Commercial Development Co., Ltd. is a professional enterprise producing indoor and outdoor metal aluminum ceiling including metal aluminum curtain board, special ceiling, galvanized iron keel, aluminum pressed veins board, honeycomb board and integrated ceiling system etc.

Our company has been established in 2007, after many years, it has been developed a classic industrial image and excellent reputation in metal aluminum ceiling industry. The Guangzhou Panda Commercial Development Co., Ltd. Occupies an area of 5066m$^2$ with modern automation production workshops and office building.

Many gifted engineering designers are employed in order to provide the integration if designing, producing, installing services for our customers. The ISO9001;2008 Quality Management System leads us to control the quality of all products, researching and developing the environmental friendly decorating materials.

"To perfect the technology to provide fast, accurate and satisfactory service" is our goal.

Company culture:
1)Quality Concept: Honest, Perfect
2)Management Philosophy: Excellent Employees, Model Enterprises
3)Service concept: unremitting pursuit of perfection
4)Marketing Concept: Quality creates brand, manages open market.
5)Competition Concept: A market without competitors is a market without a future. Respecting your opponent is protecting yourself
6)Corporate mission: promote healthy living and build green homes.
7)Corporate purpose: Environmental protection

## Certificate:













www.pandamanufacturer.com

佩达 PEIDA Super
CEILING WALL&FLOOR

# Ceiling T-GRID

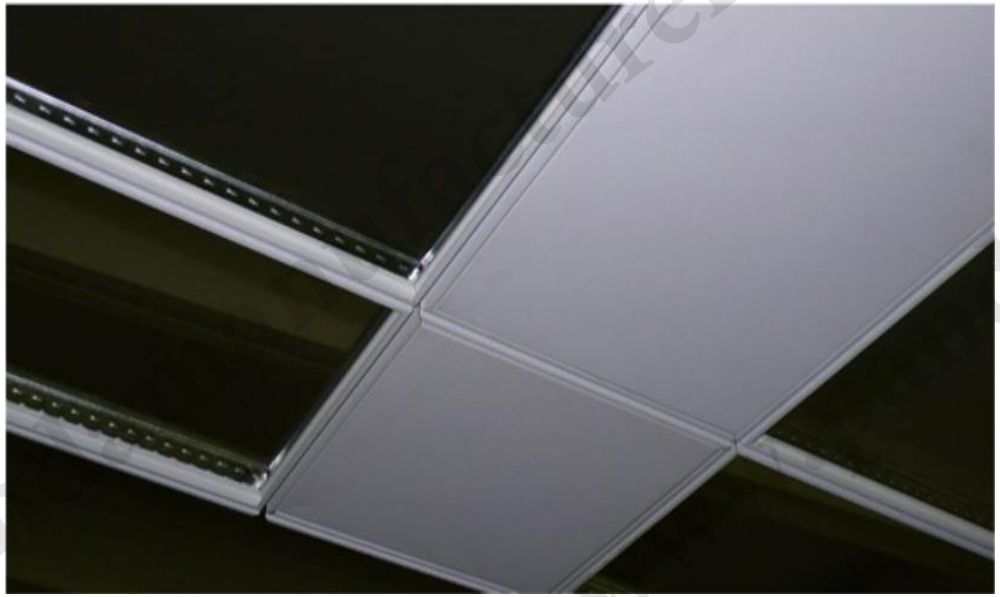



## Catalogue

### Ceiling T-GRID System


Regular Flat ..... 1

Flat Groove ..... 2

Silhouette ..... 3

Hot Dipped Galvanized Material-1 ..... 4

Hot Dipped Galvanized Material-2 ..... 5

Accessories ..... 6

Installation ..... 7

Practical Application-1 ..... 8

Practical Application-2 ..... 9

Product Packaging ..... 10


www.pandamanufacturer.com

# Regular Flat Ceiling T-Grid



**Standard Size:**

（1）Main Tee: 38X24 、32X24

Thickness(mm):0.23/0.26/0.3/0.35

Length(mm): 3660/3600 、3050/3000

（2）Cross Tee: 26X24

Thickness(mm):0.23/0.26/0.3/0.35

Length(mm): 1220/1200 、610/600

www.pandamanufacturer.com



# Flat Groove Ceiling T-Grid

**Standard Size:**

（1）Main Tee: 32X24、32X15

Thickness(mm):0.26/0.3

Length(mm): 3660/3600 、3050/3000

（2）Cross Tee: 26X24、32X15

Thickness(mm):0.26/0.3

Length(mm): 1220/1200 、610/600

# Silhouette Ceiling T-Grid



**Standard Size:**

（1）Main Tee: 38X15、32X15

Thickness(mm):0.3

Length(mm): 3660/3600 、3050/3000

（2）Cross Tee: 38X15、32X15

Thickness(mm):0.3

Length(mm): 1220/1200 、610/600

www.pandamanufacturer.com

# Ceiling T-GRID

## Hot Dipped Galvanized Material-1

| Type | Overview | Item | AXB(mm) | Thickness(mm) | Length(mm) |
|---|---|---|---|---|---|
| Regular Flat (24mm width) |  | Main Tee | 38X24<br>32X24 | 0.23/0.26/0.3/0.35<br>0.26/0.3/0.35 | 3660/3600<br>3050/3000 |
| |  | Cross Tee | 38X24<br>32X24<br>28X24<br>26X24<br>24X24 | 0.3<br>0.3<br>0.26/0.3/0.35<br>0.23/0.26/0.3/0.35<br>0.26/0.3 | 1220/1200<br>610/600 |
| Regular Flat (15mm width) |  | Main Tee | 38X15<br>32X15 | 0.3<br>0.26/0.3 | 3660/3600<br>3050/3000 |
| |  | Cross Tee | 38X15<br>32X15 | 0.3<br>0.26/0.3 | 1220/1200<br>610/600 |
| Flat Groove (24mm width) |  | Main Tee | 32X24<br>30X24 | 0.26/0.3<br>0.3 | 3660/3600<br>3050/3000 |
| |  | Cross Tee | 32X24<br>30X24<br>26X24 | 0.26/0.3<br>0.3<br>0.26/0.3 | 1220/1200<br>610/600 |
| Flat Groove (15mm width) |  | Main Tee | 32X15 | 0.26/0.3 | 3660/3600<br>3050/3000 |
| |  | Cross Tee | 32X15 | 0.26/0.3 | 1220/1200<br>610/600 |

# Ceiling T-GRID

## Hot Dipped Galvanized Material-2

| Type | Overview | Item | AXB(mm) | Thickness(mm) | Length(mm) |
|---|---|---|---|---|---|
| Silhouette |  | Main Tee | 45/42/38/32X15 | 0.3 | 3660/3600<br>3050/3000 |
| | 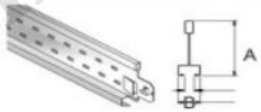 | Cross Tee | 45/42/38/32X15 | 0.3 | 3660/3600<br>3050/3000 |
| Wall Angle |  | L Type | 24X24<br>20X20<br>20X14.5 | 0.3/0.35/0.4 | 3000 |
| |  | W Type | 10X10X10X15<br>15X10X10X20<br>24X22X22X13 | 0.3/0.35/0.4 | 3000 |
| Aluminum Alloy Material | | | | | |
| Flat Groove (15mm width) |  | Main Tee | 28X15 | 0.5/0.6/0.7/0.8/1.0 | 3660/3600<br>3050/3000 |
| |  | Cross Tee | 28X15 | 0.6/0.7/0.8 | 1220/1200<br>610/600 |
| Wall Angle |  | L Type | 12X18<br>12X16 | 0.5/0.6/0.7 | 3000 |

# Ceiling T-GRID

## Accessories

| Overview | Item | Item No. | Overview | Item | Item No. | Overview | Item | Item No. |
|---|---|---|---|---|---|---|---|---|
| 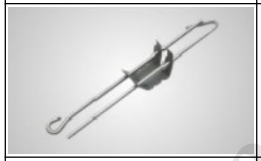 | **Adjustable Hoot Rod** | AHR-01 |  | **Thread Rod** | HB-06<br>HB-08 | 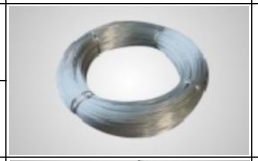 | **Galvanized Wire** | GW-01 |
|  | **Furring Channel Clip** | FC-01 | 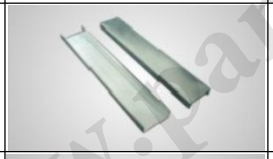 | **Main Runner** | MR-38<br>MR-50 |  | **Connector of Main Runner** | CM-38 |
|  | **Anchor** | A-01 |  | **Sleeve Anchor** | SA-06<br>SA-08 |  | **Drop in Anchor** | DIA-06<br>DIA-08 |
|  | **Nut** | N-06<br>N-08 |  | **Screw** | S-06<br>S-08 |  | **Hanger** | HD-38<br>HD-50 |



**Regular Flat**



**Flat Groove**



**Silhouette**

# Ceiling T-GRID

## Installation

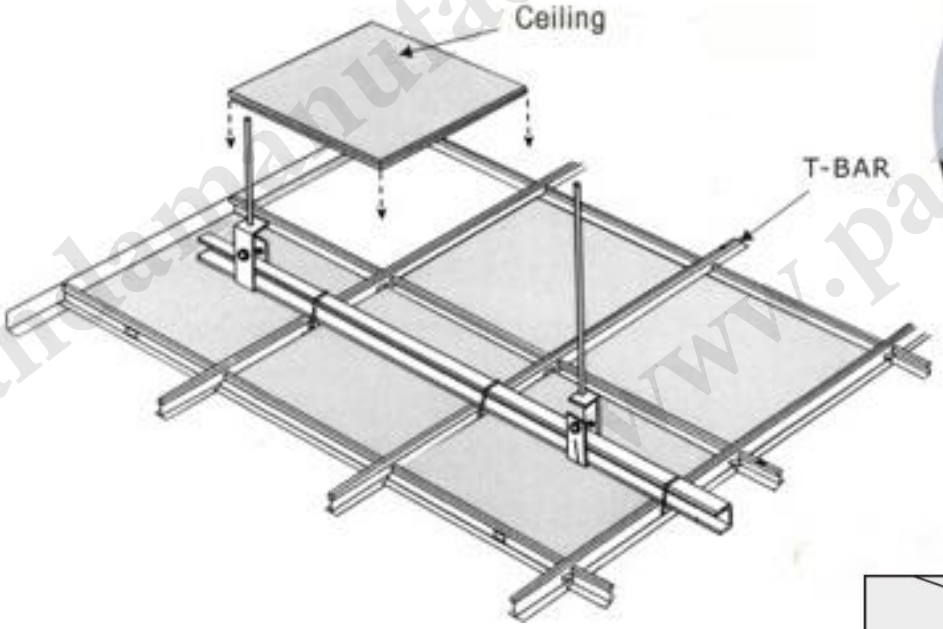






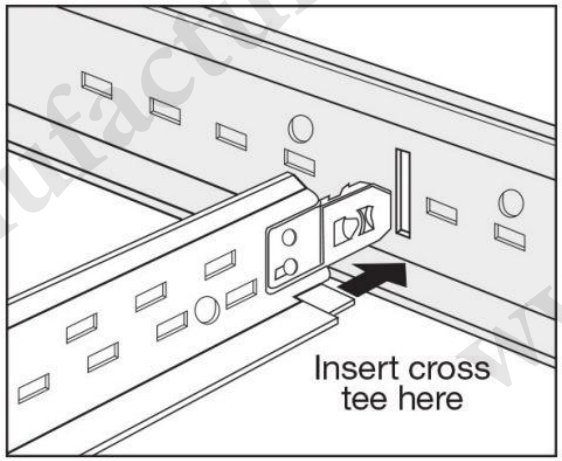




www.pandamanufacturer.com

# Ceiling T-GRID

## Practical Application-1

| Product Name | Application Examples | Product Name | Application Examples |
|---|---|---|---|
| PVC GYPSUM CEILING |  | MINERAL FIBER ACOUSTIC CEILING |  |
| ALUMINUM CEILING |  | PVC CEILING （Square Ceiling） | 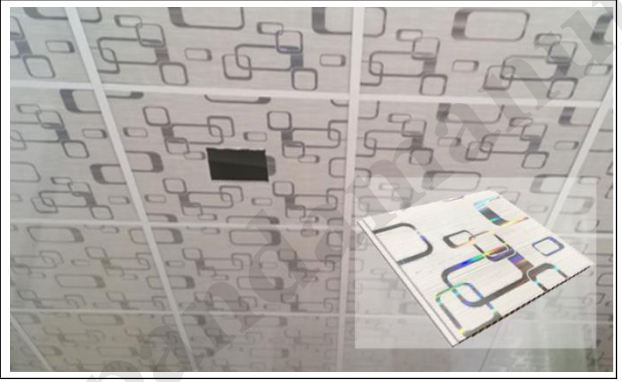 |
| GYPSUM CEILING |  | | |

# Ceiling T-GRID

## Practical Application-2






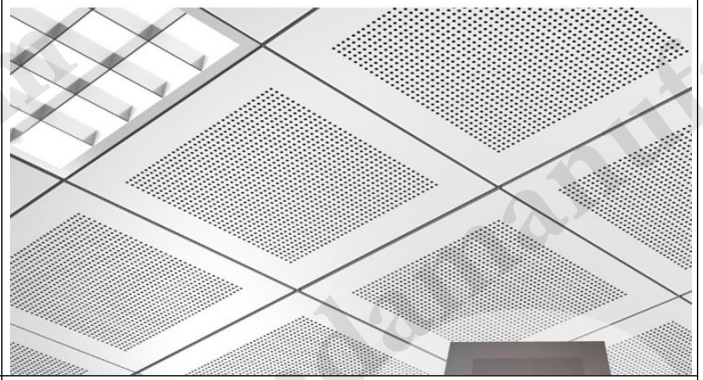




# Ceiling T-GRID

## Product Packaging











www.pandamanufacturer.com